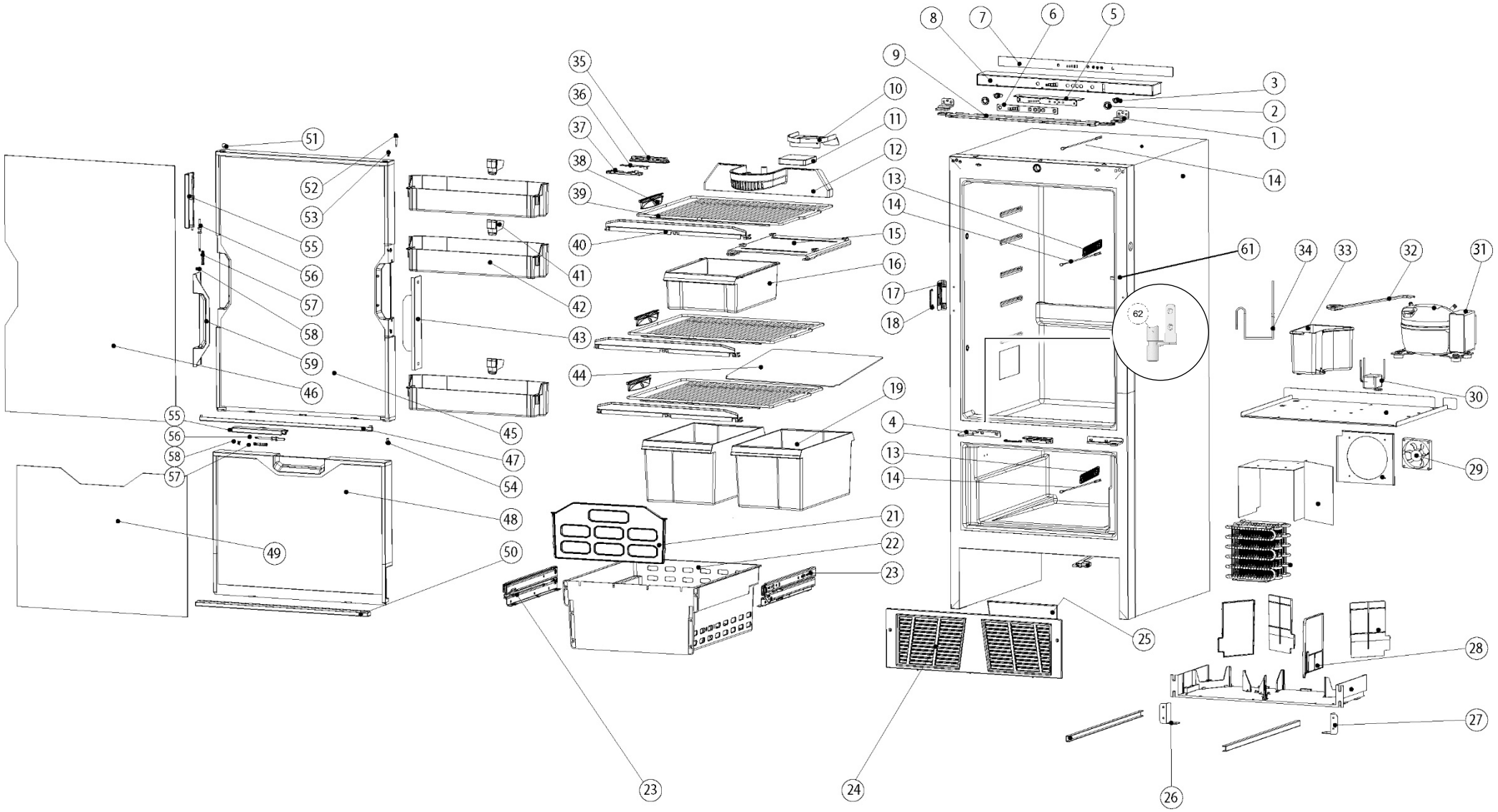
1
2
3
4
5
6
7
8
9
10
11
12
13
14
15
16
17
18
19
21
22
23
24
25
26
27
28
29
30
31
32
33
34
35
36
37
38
39
40
41
42
43
44
45
46
47
48
49
50
51
52
53
54
55
56
57
58
59
61
62

		Spare part number	Spare part number	Colours available
1	Right upper hinge Left upper hinge		692822	
2	Fixing nut			
3	Fixing leg			
4	Right bottom hinge Left bottom hinge			
5 6	Display board (5: PCB and 6: Light cover) *Serial No. Exxx#x**DW0036**xxxx - Exxx#x**DW0042**xxxx* *Production date < 15-06-2021*	~~692865~~	692843	
	Display board (5: PCB and 6: Light cover) *Serial No. Exxx#x**DW0059**xxxx - Exxx#x**DW0065**xxxx* *Production date ≥15-06-21*	~~692865~~	693033	
7	Sticker	~~692824~~	693067	
8	Housing	~~692825~~		
9	Cover plate	692826		
10	Fan shield	692827		
11	Internal fan	692777		
12	Fan cover	692829		
13	Thermistor cover		692776	
14	Thermistor			
15	Cover slide out box	692831		
16	Breakfast tray	692832		
17	Door latch plate		692758	
18	Winter lock support			
19	Vegetable bin	692876		
21	Freezer drawer divider	692835		
22	Drawer bin	692878		
23	Drawer guide right + left *Serial Number < E225#ZDWxxxxx /production date < 13-08-2022*		692837	
	Drawer guide right + left ball bearing *Serial Number ≥ E225#ZDWxxxxx / production date ≥ 13-08-2022*		693068	
24	Ventilation for cooling	692838		
25	Filters	692839		
26	Left bottom fixing plate		692840	
27	Right bottom fixing plate			
28	Mid deflector			
29	Condenser fan	692785		
30	2-way valve			
31	Control module *Serial Number range*			
	*Exxxx**DW**xxxxx* *Exxx#x**DW0026**xxxx - Exxx#x**DW0042**xxxx*	691391		
	*Exxx#x**DW0043**xxxx - Exxx#x**DW0065**xxxx*	692821		
32	Power cord	692846		
33	Drip cup	692847		

34	Evaporator tube	692848		
35 36 37	Light housing LED light Light cover		692779	
38	Clip shelf large	~~692791~~	692761	
39	Shelf	692893		
40	Food retainer	692864		
41	Bottle divider	692853		
42	Door bin	692854		
43	Door cover	692795		
44	Plate	692898		
45 46	Cabinet door Door panel	69233327SP	692857	
47	Panel retainer cabinet door	692858		
48 49	Freezer door Freezer door panel	69233427SP	692859	
50	Panel retainer freezer door	692860		
51 52 53 54	Screw cap Upper hinge shaft Upper hinge shaft spring Lower hinge shaft		692883	
55 56 57 58 59	Handle Handle connecting shaft Big spring Small spring Handle groove		692889 *freezer handle*	692798 *door handle*
61	Door switch	692641		
62	Travel lock incl. hinge plate (optional accessory)	692316		

~~Xxxxxx~~ = not available anymore

Note Identification Label
With a request for information or service, always provide the serial number of the refrigerator. The serial number is the code below the barcode on the identification label.